DocuSign Envelope ID: 33884469-6771-4110-B86C-7FFBE3A883ED

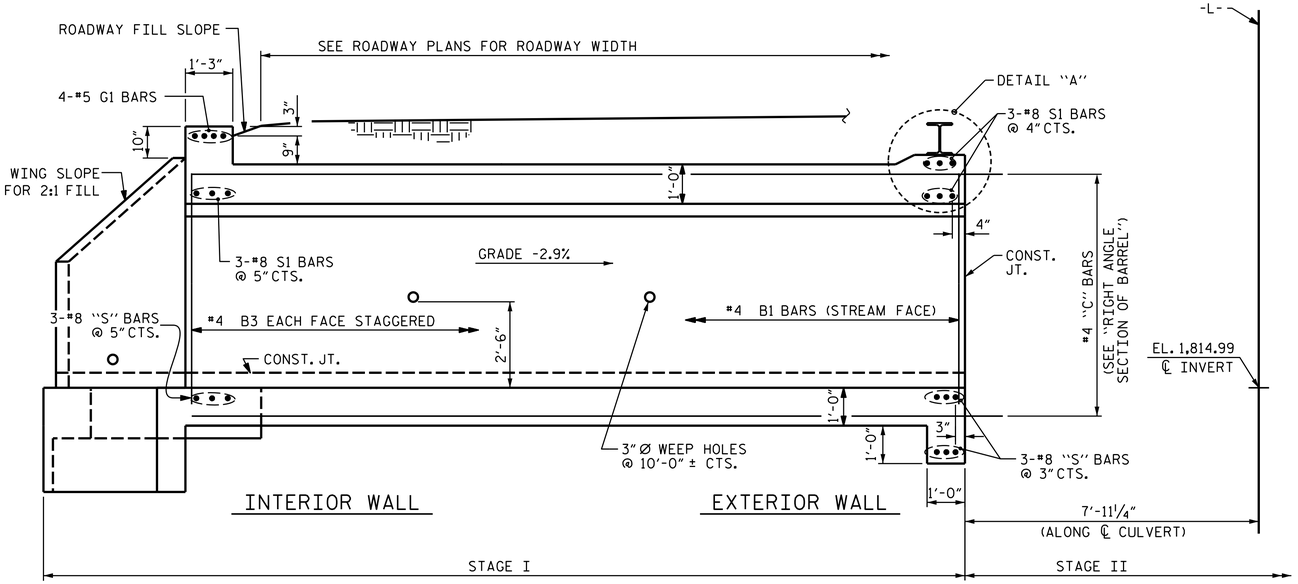

CULVERT SECTION NORMAL TO ROADWAY (STAGE I)

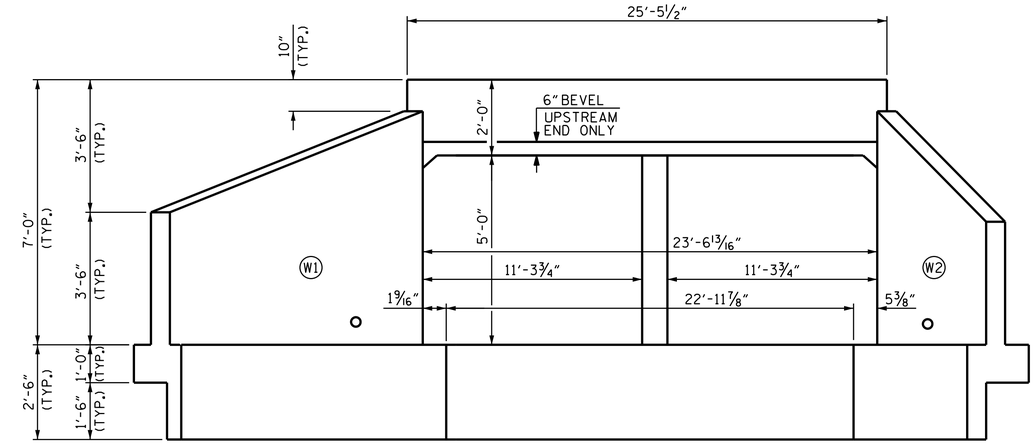

END ELEVATION NORMAL TO HEADWALL SKEW

(LOOKING DOWNSTREAM)

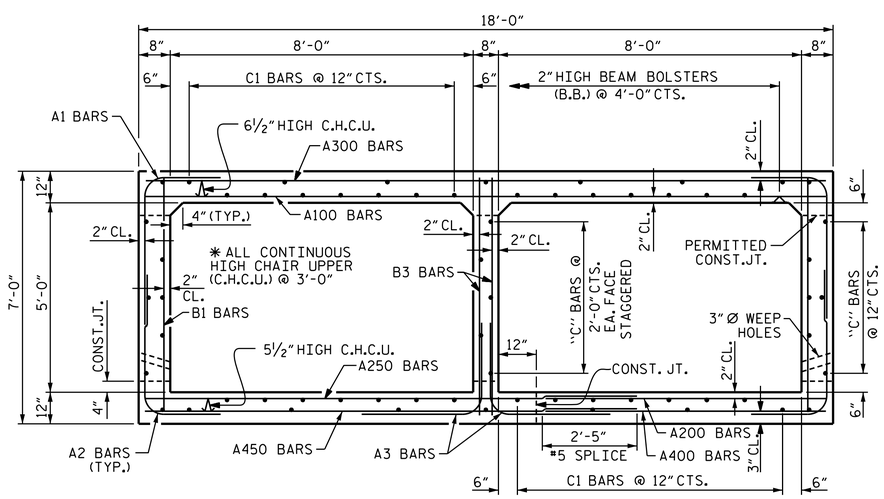

RIGHT ANGLE SECTION OF BARREL

THERE ARE 63 "C" BARS IN SECTION OF BARREL.

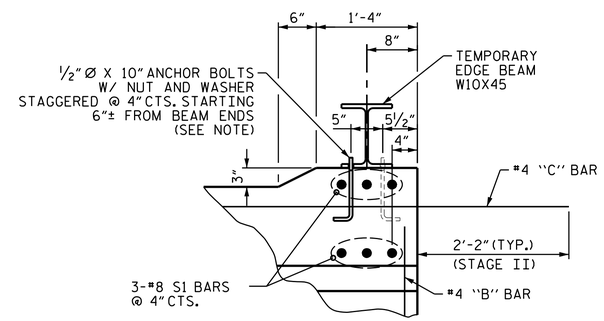

NOTE: AFTER STAGE II IS COMPLETE, THE BEAM SHALL BE REMOVED AND ANCHOR BOLTS CUT SMOOTH AND EPOXY APPLIED TO EXPOSED BOLTS TO PREVENT CORROSION.

DETAIL "A"

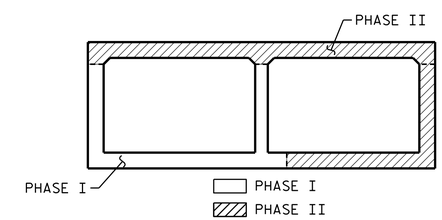

CONSTRUCTION PHASING

(LOOKING DOWNSTREAM)

PROJECT NO. 17BP.14.R.79

GRAHAM COUNTY

STATION: 11+53.30 -L-

SHEET 2 OF 11

STATE OF NORTH CAROLINA
DEPARTMENT OF TRANSPORTATION
RALEIGH

DOUBLE 8FT. X 5FT. CONCRETE BOX CULVERT STAGE I

DOCUMENT NOT CONSIDERED FINAL UNLESS ALL SIGNATURES COMPLETED

DESIGN ENGINEER OF RECORD:
Docusigned by: Thomas M. Harris
DATE: 12/14/2018

NORTH CAROLINA PROFESSIONAL SEAL 19299 ENGINEER THOMAS M. HARRIS

WSP USA Inc.
434 FAYETTEVILLE STREET
SUITE 1500
RALEIGH, NC 27601
TEL: 1.919.836.4040
LICENSE NO. F-0165

REVISIONS						
NO.	BY:	DATE:	NO.	BY:	DATE:	
1			3			
2			4			

SHEET NO. C-2
TOTAL SHEETS 11

DRAWN BY : M. HOBBS DATE : 10/2014
CHECKED BY : M. MILLS DATE : 10/2014