DocuSign Envelope ID: 33884469-6771-4110-B86C-7FFBE3A883ED

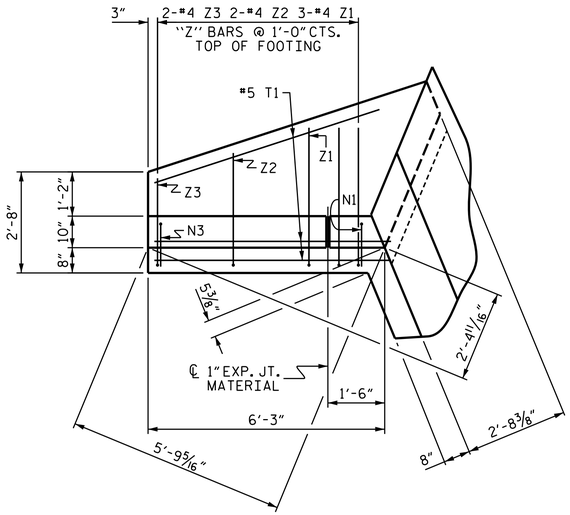

PLAN W2

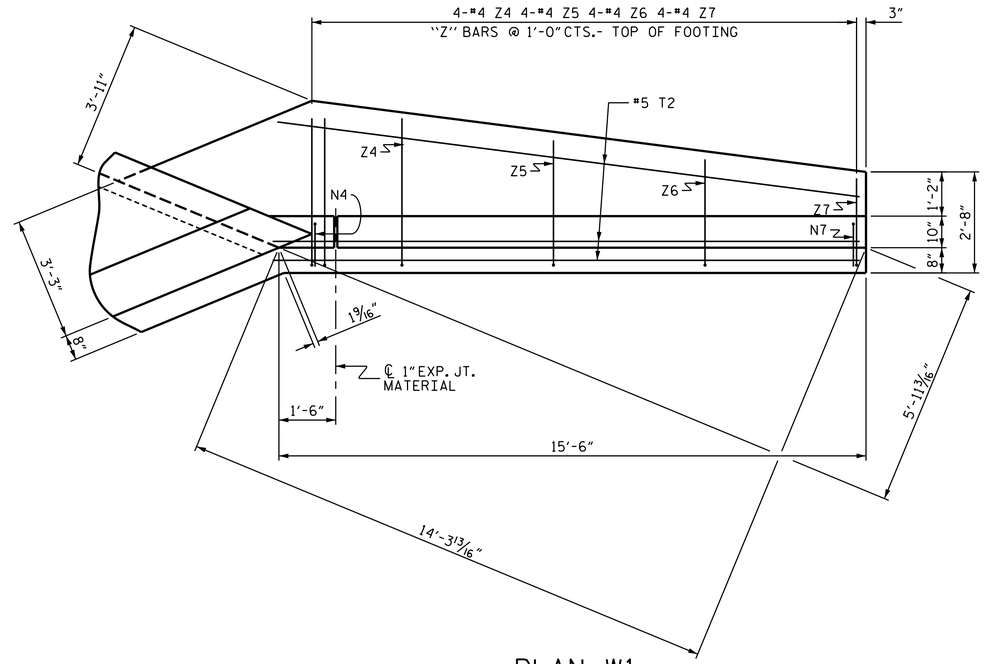

PLAN W1

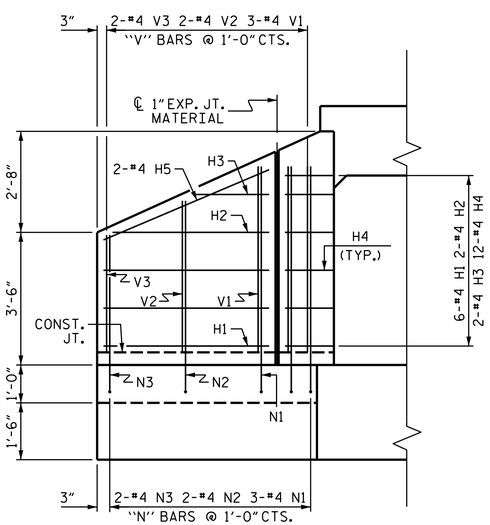

ELEVATION W2

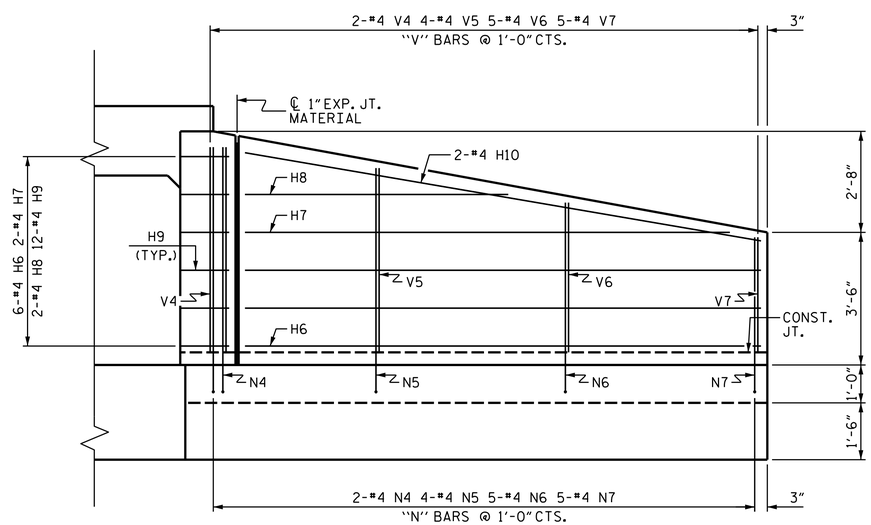

ELEVATION W1

BAR TYPES

ALL BAR DIMENSIONS ARE OUT TO OUT.

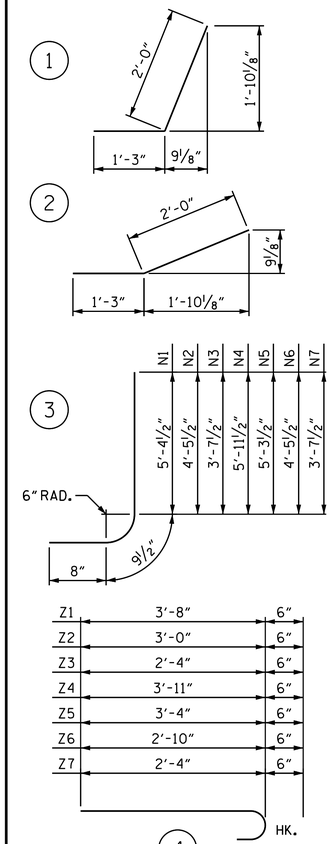

BILL OF MATERIAL

BAR	NO.	SIZE	TYPE	LENGTH	WEIGHT
H1	6	#4	STR	4'-4"	17
H2	2	#4	STR	4'-1"	5
H3	2	#4	STR	1'-9"	2
H4	12	#4	1	3'-3"	26
H5	2	#4	STR	4'-9"	6
H6	6	#4	STR	13'-7"	54
H7	2	#4	STR	12'-9"	17
H8	2	#4	STR	6'-11"	9
H9	12	#4	2	3'-3"	26
H10	2	#4	STR	13'-9"	18
N1	3	#4	3	6'-10"	14
N2	2	#4	3	5'-11"	8
N3	2	#4	3	5'-1"	7
N4	2	#4	3	7'-5"	10
N5	4	#4	3	6'-9"	18
N6	5	#4	3	5'-11"	20
N7	5	#4	3	5'-1"	17
T1	3	#5	STR	6'-3"	20
T2	3	#5	STR	15'-6"	48
V1	3	#4	STR	4'-9"	10
V2	2	#4	STR	3'-11"	5
V3	2	#4	STR	3'-1"	4
V4	2	#4	STR	5'-5"	7
V5	4	#4	STR	4'-9"	13
V6	5	#4	STR	3'-10"	13
V7	5	#4	STR	3'-0"	10
Z1	3	#4	4	4'-2"	8
Z2	2	#4	4	3'-6"	5
Z3	2	#4	4	2'-10"	4
Z4	4	#4	4	4'-5"	12
Z5	4	#4	4	3'-10"	10
Z6	4	#4	4	3'-4"	9
Z7	4	#4	4	2'-10"	8

REINFORCING STEEL
FOR 2 WINGS (STAGE I & II) 460 LBS

CLASS A CONCRETE - STAGE I

2 WINGS	7.4	CY
1 HEADWALL	1.2	CY
1 END CURTAIN WALL	1.4	CY
2 EDGE BEAMS	1.3	CY
TOTAL	11.3	CY

CLASS A CONCRETE - STAGE II

2 WINGS	7.4	CY
1 HEADWALL	1.2	CY
1 END CURTAIN WALL	1.4	CY
2 EDGE BEAMS	1.3	CY
TOTAL	11.3	CY

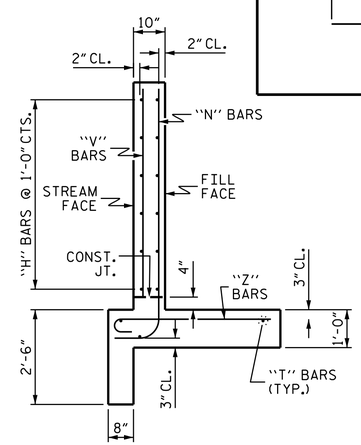

TYPICAL WING SECTION

PROJECT NO. 17BP.14.R.79
GRAHAM COUNTY
STATION: 11+53.30 -L-

SHEET 9 OF 11

DESIGN ENGINEER OF RECORD:
DocuSigned by: Thomas M. Harris
08D8B9B9B4B94D3
DATE: 12/14/2018

DOCUMENT NOT CONSIDERED FINAL UNLESS ALL SIGNATURES COMPLETED

NORTH CAROLINA PROFESSIONAL SEAL 19299 ENGINEER THOMAS M. HARRIS

WSP USA Inc.
434 FAYETTEVILLE STREET
SUITE 1500
RALEIGH, NC 27601
TEL: 1.919.836.4040
LICENSE NO. F-0165

STATE OF NORTH CAROLINA
DEPARTMENT OF TRANSPORTATION
RALEIGH

STANDARD WINGS FOR CONCRETE BOX CULVERT

H = 5'-0" SLOPE = 2:1
STAGES I AND II

REVISIONS						SHEET NO.
NO.	BY:	DATE:	NO.	BY:	DATE:	C-9
1			3			TOTAL SHEETS
2			4			11

STD. NO. CW4505

ASSEMBLED BY :	M. HOBBS	DATE :	10/2014
CHECKED BY :	M. MILLS	DATE :	10/2014
DRAWN BY :	CCJ		01/00
CHECKED BY :	RWW		03/00