DocuSign Envelope ID: 33884469-6771-4110-B86C-7FFBE3A883ED

NOTES

NATIVE MATERIAL EXCAVATED FROM THE EXISTING STREAM BED OR FLOOD PLAIN AT THE PROJECT SITE DURING CULVERT CONSTRUCTION SHALL BE STOCKPILED AND LATER PLACED IN THE PROPOSED CULVERT BETWEEN SILLS TO PROVIDE A CONTINUOUS LOW FLOW CHANNEL. NATIVE MATERIAL IS SUBJECT TO APPROVAL BY THE ENGINEER AND MAY BE SUBJECT TO PERMIT CONDITIONS.

THE STOCKPILED NATIVE MATERIAL SHALL BE PLACED AS SHOWN IN THE "PLAN OF FLOOR SILL LAYOUT" SKETCH TO PROVIDE A 1'-6" DEPTH LOW FLOW CHANNEL BETWEEN LOW FLOW SILLS, AND SHALL BE PLACED TO THE DEPTH OF 2'-6" BETWEEN HIGH FLOW SILLS.

IF NECESSARY, SUPPLEMENTAL STONE OF SIMILAR CHARACTERISTIC OF THE NATIVE MATERIAL MAYBE USED WITH APPROVAL BY ENGINEER. SUPPLEMENTAL STONE WILL BE PAID FOR UNDER THE CONTRACT PRICE FOR CHANNEL SUBSTRATE MATERIAL FOR NATIVE STONE.

THE ENTIRE COST OF WORK REQUIRED TO PLACE THE EXCAVATED MATERIAL SHALL BE INCLUDED IN THE CONTRACT LUMP SUM PRICE BID FOR CULVERT EXCAVATION.

THE ENTIRE COST OF WORK REQUIRED TO CONSTRUCT THE SILLS SHALL BE INCLUDED IN THE VARIOUS PAY ITEMS. NO SEPARATE PAYMENT WILL BE MADE FOR THE 30 LB. ROOFING FELT.

TOP OF LOW FLOW SILLS SHOULD MATCH STREAM BED ELEVATION IN LOW FLOW CHANNEL OF STREAM. (THALWEG)

DO NOT SET ELEVATION OF HIGH SILL ABOVE BANK FULL.

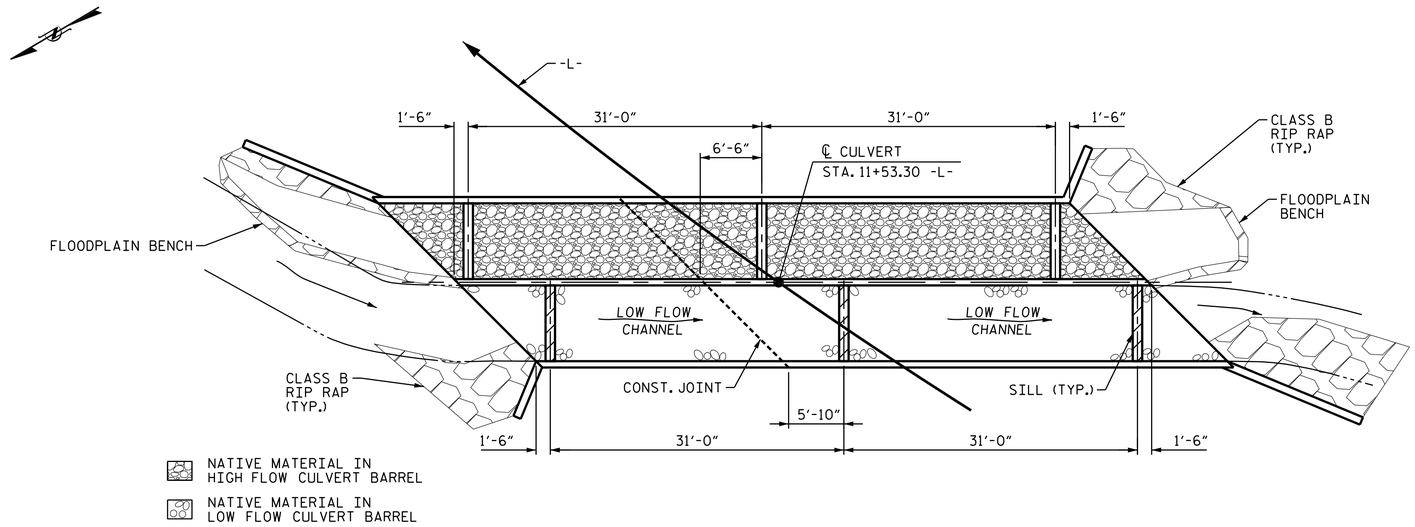

PLAN OF FLOOR SILL LAYOUT

LOW FLOW SILLS DENOTED BY CROSSHATCHED AREA.

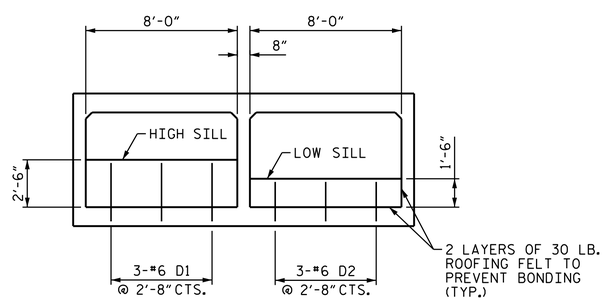

ELEVATION

LOOKING DOWNSTREAM

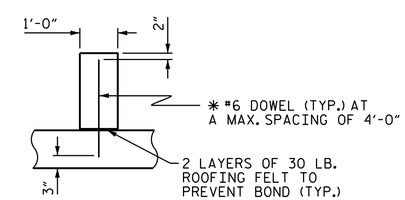

SECTION THROUGH SILL

* DOWELS MAY BE PUSHED INTO GREEN CONCRETE AFTER SLAB HAS BEEN FLOAT FINISHED

CULVERT SILL DETAILS

PROJECT NO. 17BP.14.R.79

GRAHAM COUNTY

STATION: 11+53.30 -L-

SHEET 7 OF 11

STATE OF NORTH CAROLINA
DEPARTMENT OF TRANSPORTATION
RALEIGH

DOUBLE 8FT. X 5FT.
CONCRETE BOX CULVERT
STAGES I & II
BAFFLE/SILL LAYOUT

DESIGN ENGINEER OF RECORD:
DocuSigned by:
Thomas M. Harris
08089699648B403...
DATE: 12/14/2018

DOCUMENT NOT CONSIDERED FINAL UNLESS ALL SIGNATURES COMPLETED

NORTH CAROLINA PROFESSIONAL SEAL 19299 ENGINEER THOMAS M. HARRIS

WSP USA Inc.
434 FAYETTEVILLE STREET
SUITE 1500
RALEIGH, NC 27601
TEL: 1.919.836.4040
LICENSE NO. F-0165

REVISIONS						SHEET NO.
NO.	BY:	DATE:	NO.	BY:	DATE:	C-7
1			3			TOTAL SHEETS
2			4			11

DRAWN BY : M. HOBBS DATE : 10/2014
CHECKED BY : M. MILLS DATE : 10/2014